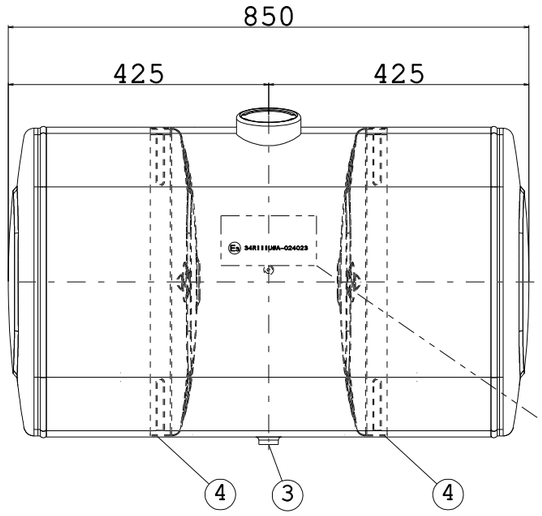

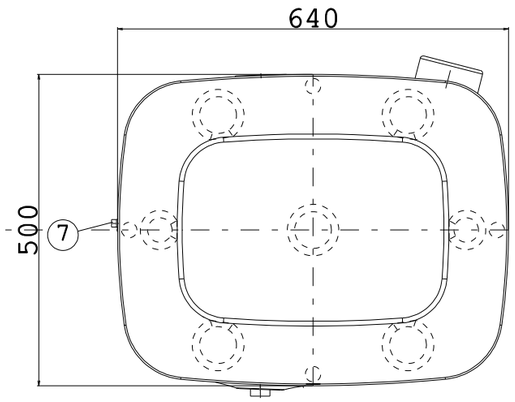

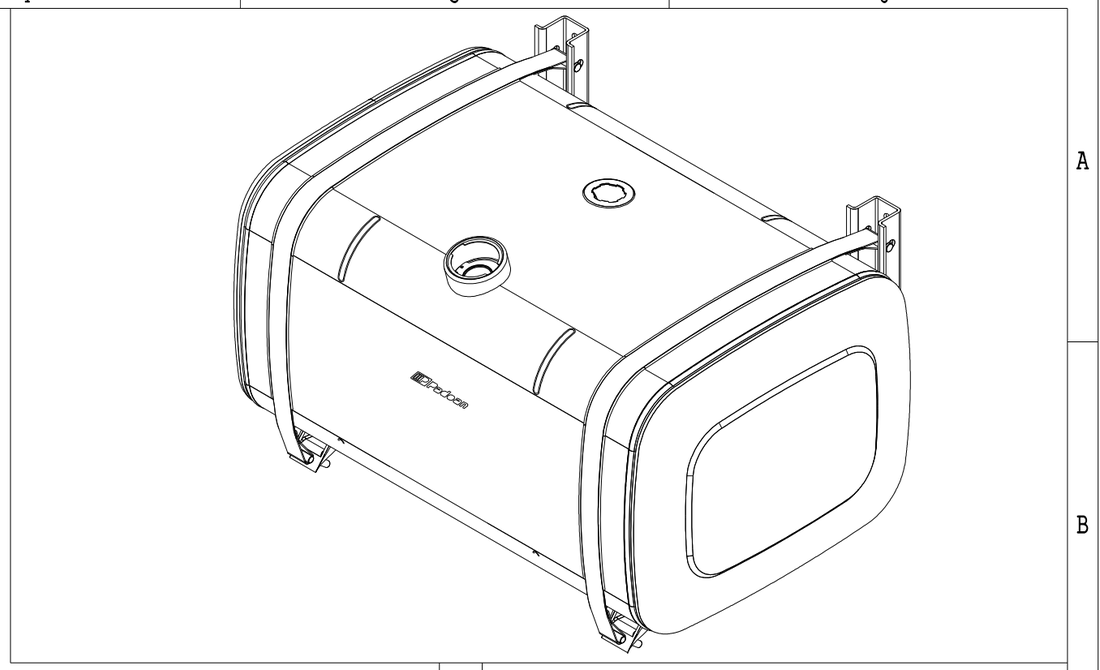

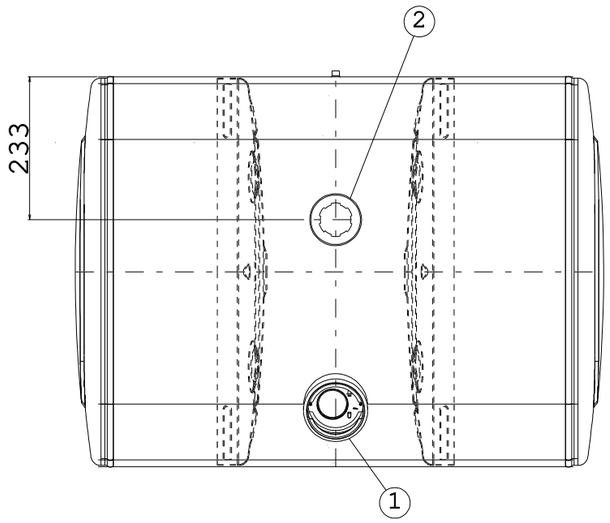

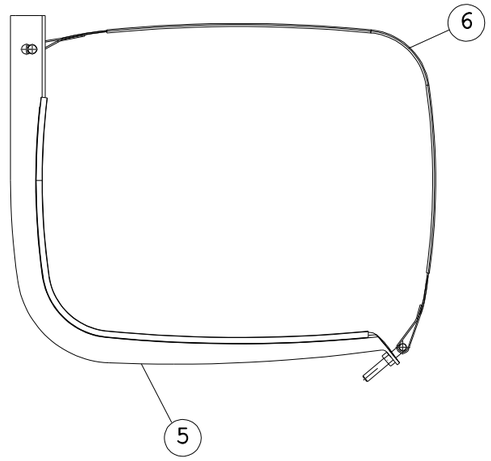

5 SUPPORT CONNECTION DETAIL

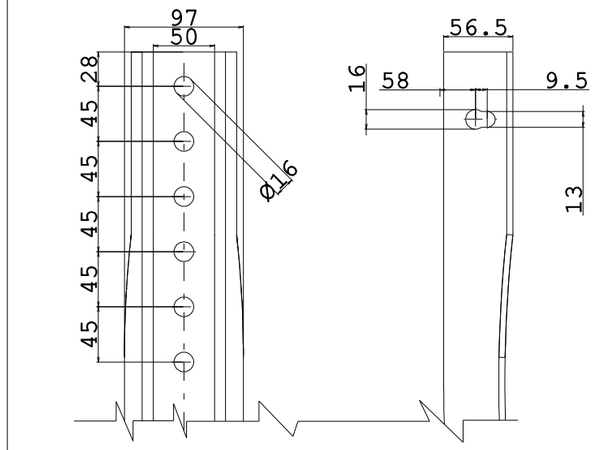

MARK DETAIL

Padoan

E3 34RIIIU#A-024023

Tank composition

Pos.	Denomination	Q.ty
1	FILLING CAP	1
2	LEVEL INDICATOR VDO TYPE CONNECTION	1
3	DIESEL DRAINAGE	1
4	PARTITION	2
5	SUPPORT 50/64	2
6	STRAP	2
7	GROUND CONNECTION	1

Tank dimension	Rev.	Modify description	Date	Dis.	Ver.	App.
	0	EMISSION	10/10/2016	MM	MM	EB

Part name : Diesel oil tank 240 LT Al/Steel/Stainl.steel fam. 500x640

Full capacity: 240 Lt

Support weight: 20 Kg

Tank weight: (F,I,T) kg (A) kg

Dimensions: 850x500x640 mm

Part code : NSG(X)0240085C100

Scale: 1:10

Replace the

Replaced by

Material code

(X)=F:Steel DC03A EN 10130

(X)=I:Stainless steel AISI 304 UNI EN 10088

(X)=T:Textured stainless steel. AISI 304 UNI EN 10088

(X)=A:Aluminium EN AW 5754

General tolerances: ISO 2768 V

Drawing format A3

Padoan®

OWNERSHIP OF THIS DRAWING IS RESERVED BY LAW AND MAY NOT REPRODUCED IN WHOLE OR IN PART WITHOUT PERMISSION OF PADOAN S.R.L.

DO NOT MAKE MEASUREMENTS ON DRAWING
DO NOT CHANGE WITHOUT TECHNICAL OFFICE AUTHORIZATION