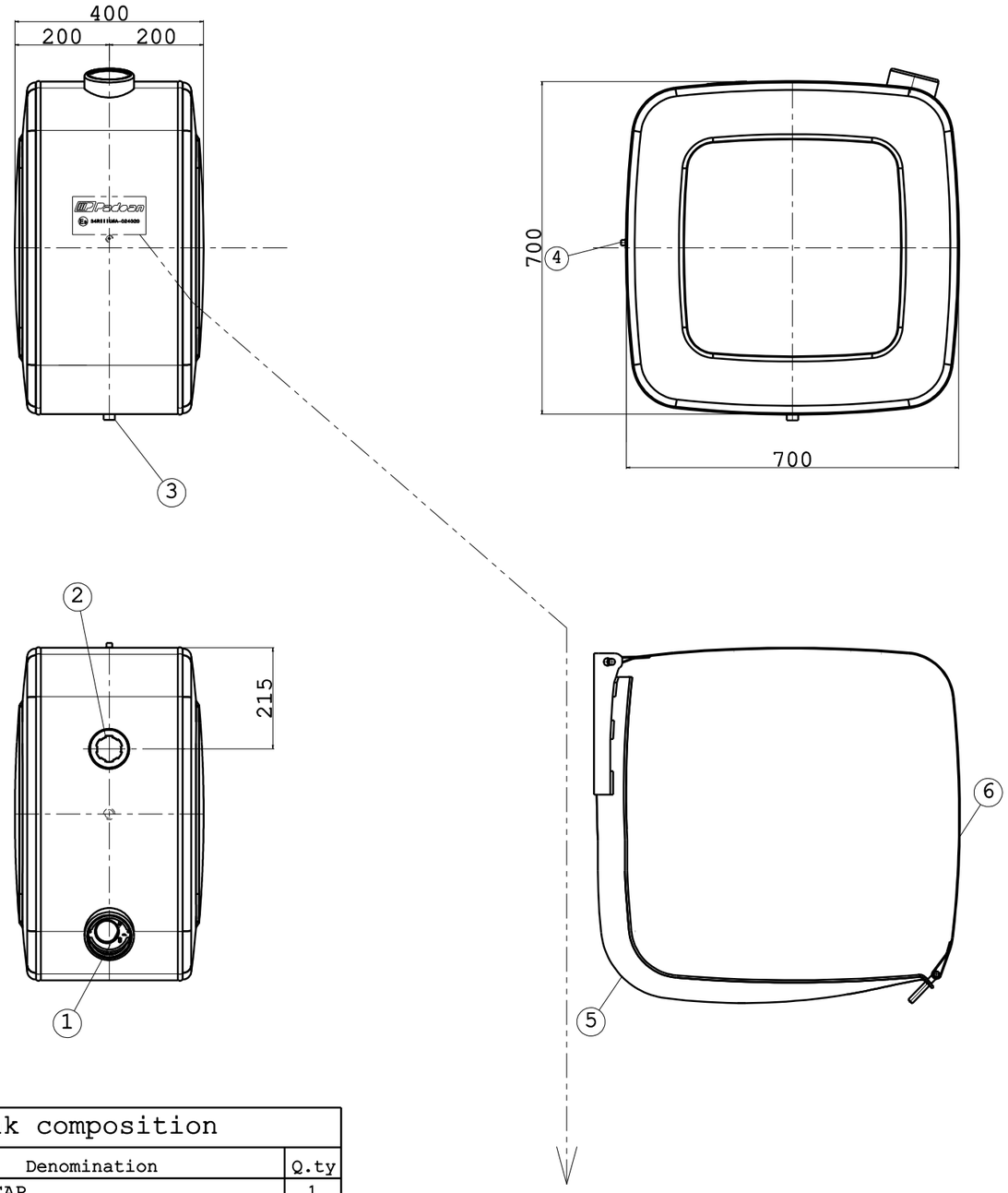

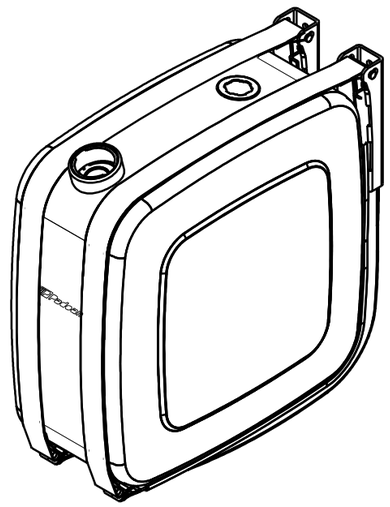

4 SUPPORT CONNECTION DETAIL

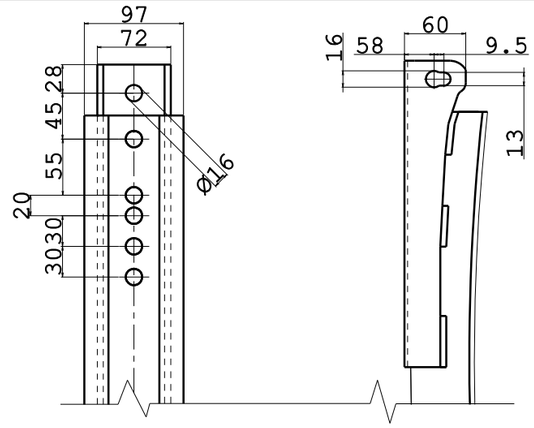

Scale 1:6

MARK DETAIL

Tank composition

Pos.	Denomination	Q.ty
1	FILLING CAP	1
2	LEVEL INDICATOR VDO TYPE CONNECTION	1
3	DIESEL DRAINAGE	1
4	GROUND CONNECTION	1
5	SUPPORT 70/70	2
6	STRAP	2

Rev.	Description	Date	Dis.	Ver.	App.
2	NEW LOGO PADOAN	09/03/2016	FM	MM	EB
1	PUT ON GROUND CONECTION, NEW OMOLOGATION AND SUPPORT CONNECTION	25/11/2013	AF	MM	BM
0	EMISSION	11/12/2007	MM	CGP	PF

Tank dimension

Part name : Diesel oil tank 190 L Al/Steel/Stainl.Steel fam. 700x700

Full capacity 170 Lt

Support weight 27 Kg

Tank weight (F,I,T) kg (A) kg

Dimensions 400x700x700 mm

Part code : NSG(X)0190040C100

OUT OF SCALE

Replace the

Replaced by

Material code

(X)=F:Steel DC03A EN 10130

(X)=I:Stainless steel AISI 304 UNI EN 10088

(X)=T:Textured stainless steel. AISI 304 UNI EN 10088

(X)=A:Aluminium EN AW 5754

General tolerances: ISO 2768 V

Drawing format A3

OWNERSHIP OF THIS DRAWING IS RESERVED BY LAW AND MAY NOT REPRODUCED IN WHOLE OR IN PART WITHOUT PERMISSION OF PADOAN S.R.L.

DO NOT MAKE MEASUREMENTS ON DRAWING DO NOT CHANGE WITHOUT TECHNICAL OFFICE AUTHORIZATION