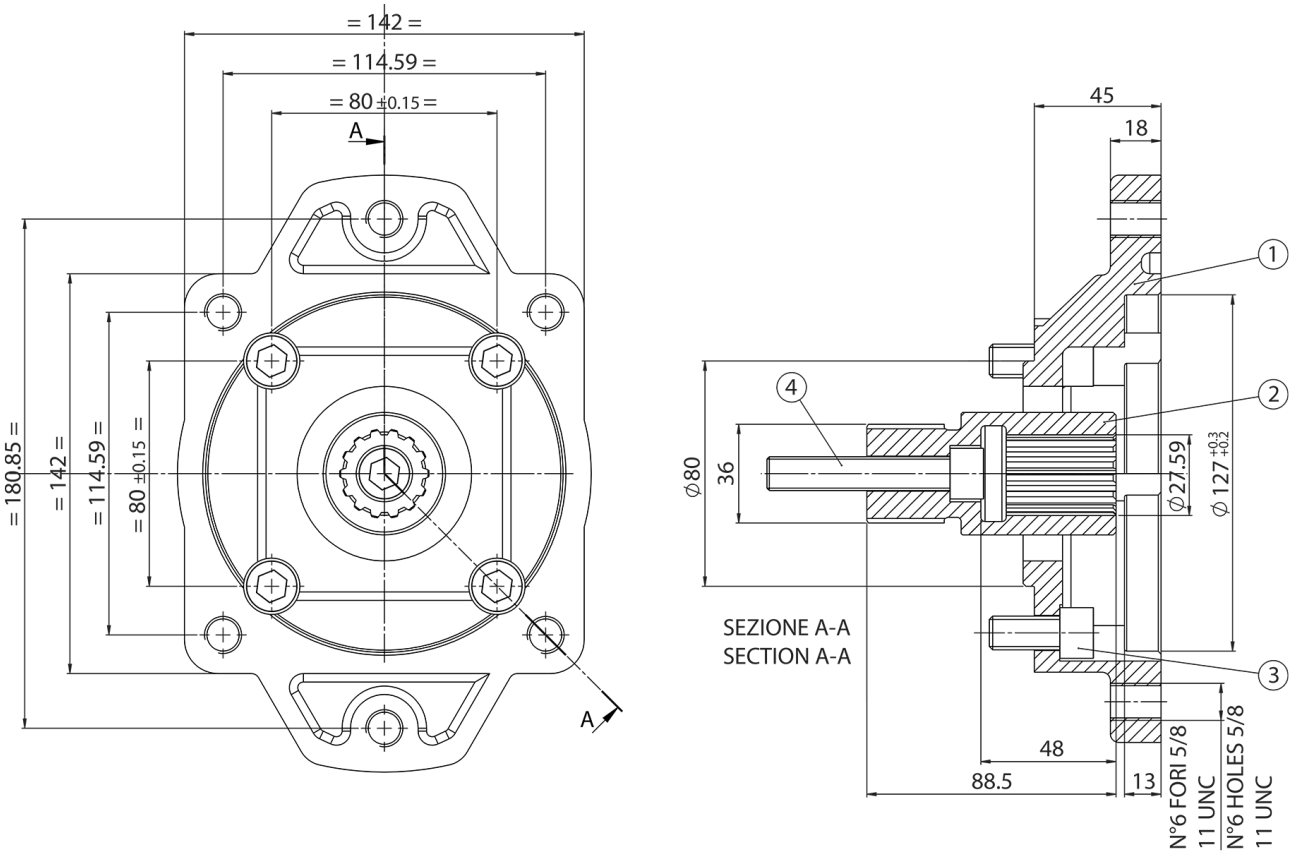Shaft kit
205X1289000