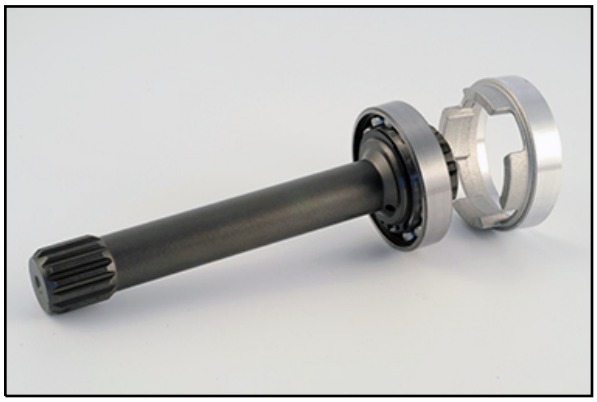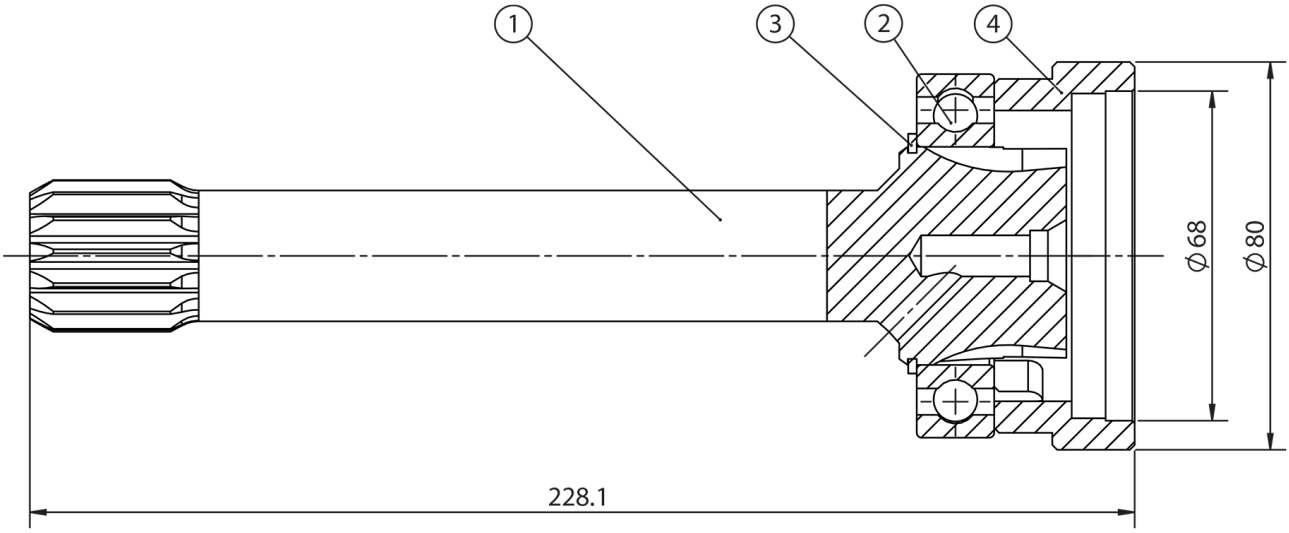Shaft kit
205A4090000